UNIT-1 Process Planning & Process Engineering

Process : Process can be defined as the method of converting the raw material into finished product.

Planning : Planning is an activity we perform before taking action planning is deciding in advance what to do, how to do it, when to do it, who has to do it.

Process Planning : Process planning is also known as manufacturing planning or material processing. For manufacturing a product, the required process needs to be planned. Process planning develops a detail plan of manufacturing a product. An efficient or economical planning leads the firms (organization) towards success.

- Process planning is defined as the process of determination of the method by which a product is to be manufactured economically and effectively. ie- Process planning determines the most economical process of performing an operation or an activity.

- A process planning is mainly concerned with:
  Determining the manufacturing process, sequence of operations, equipment, tools and labour required for the production of a component or a product.

Aim or Functions of Process Engineering,

The process planning or process engineering is the function of determining exactly how a product will be made. The important functions of process engineering are:

1. To determine what product or part to be manufactured (ie. setting objective) and which parts are to be purchased from outside.
2. To determine the most economical manufacturing process to be used.
3. To determine the sequence of operations to be performed on each components.
4. Quantity of work to be performed.
5. Detailed specification of the product to be manufactured
6. To prepare material list for all components of product and to findout the sources from which we can purchase the raw materials.
7. To determine, select or check the availabity of equipments, machine tools needed to manufactured the product.
8. To determine the kind of labour required to do the job.
9. To determine the time standards of performance of the job.
10. Estimate the cost of production before manufacturing start.

Steps in process planning:

Process planning is the selection of a systematic method or process by which the product is to be manufactured economically. There are various steps involved in process planning and the procedure may differ slightly from industry to industry.

1. Analysis of the product to be manufactured and its specification,

This is the primary step of process planning which specifies the objective of an organisation. The process planning begins with the setting of objectives. ie- What an organisation wants to achieve.

2. Improvement of the specification

All the specifications must be clear. If these are confusing or incomplete, then the process engineer protect them.

3. Make or buy decision

The product may consist of number of parts or components. The process planning determines what parts are to be manufactured in the factory and what parts are to be purchased.

4. Selection of basic manufacturing process

Once the decision is taken regarding what parts are to be manufactured in the industry, the next step is to prepare a list of basic operation required to process each components of the product and we select the most practical and economical method.

5. Determine the sequence of operation

Once the best manufacturing process is selected, the sequence of operation to be performed on each component is determined.

6. Prepare the list of raw materials

Determine which raw material is used in making all the components of the products and also the number of quality to be produced.

7. Selection of the machine tool or equipments

The selection of the correct equipment or machine tool is closely related to the selected process of manufacture. Following factor must be considered while selecting a correct equipment.

1. Size and shape of the workpiece
2. The work material
3. The accuracy and surface finished required
4. Quantity required.

8. Inspection and quality control

To determine the stage of inspection and also the need of checking and quality control devices for different stages of manufacturing.

9. Labour Requirements

To determine the kind of labours and employees required to do the job and established a HR department for recruitment and selection.

10. Time standards

To determine the time standards for performance of the job and fixing the rate of payment.

11. Cost of production

Estimate the cost of production even before the manufacture starts.

12. Prepare the operation sheet and the route sheet

The operation sheet shows everything about the operation. i.e. description of operation type of machinery tools and equipment used, setup and operation times; feed depth of cut etc.

Factors affecting process planning

There are various factors affecting the process planning.

1. Size and type of raw materials:

Process planning starts with the selection of raw material. The raw material may be available in market in the form of casting, forging, bar stock (round bar, square bar, hexagonal bar), sheet metal etc.

Improper selection of material may result in:

a) Wastage of material increased scrap
b) Increased material handling cost
c) Increased tool cost
d) Increased process time.

2. Processing Method:

The process by which product is made has a direct impact on the process planning because variation of process will vary the type of machine tool, equipments, production time, production cost type of labour required and also the quality and surface finish of components.

3. Choice of plant layout:

While deciding the sequence of operations a proper plant layout is to be taken. All machines are arranged according to the sequence of operation so that, successive operations are carried out on adjacent machine, to minimize the delay and the handling cost.

4. Capacities of machine tools:

The dimensional limitations of a machine or equipment and their capacities should be considerd. Such as lathe ~~[illegible]~~ size, shape size, capacity of press, capacity of furnace etc.

5. Surface finish and accuracy required:

The type of machines, tools, manufacturing process selected will vary with surface finished requirements. When rough surface is sufficient single point cutting tool is used but when smooth surface finish is required multipoint cutting tool and costly operations such as honing, lapping and superfinishing are carried out.

6. Quantity to be manufactured:

When only few parts are to be manufactured we cannot use the processes involving more setups, costly tools and spacial purpose machines. But when the production in on large scale, we setup spacial machines and spacial tools.

7. Delivery date of components and product.

Pre-requesites of process planning:

The following information is necessary for process planning:

1. Working drawing of components of the product along with the manufacturing specifications for the finished parts.
2. Assembly drawing showing the position of assemblies.
3. Part list of all the component of the product.
4. Annual output of the product.
5. No. of component of each unit.
6. Material of all components.
7. Equipments and tool data.
8. Cutting fluid used in industry.
9. Catalogues of cutting, measuring and type of tools.
10. Data on metal cutting condition, holding and setup times.
11. Standard available stock size.

It highly important to make a detailed information of part drawings and job specifications of each components of product before starting the process design.

Make or Buy decision :

Most of the companies are not producing all the parts of the product, they usually purchase some parts from the outside supplier and some of the components are produce internally. (i.e. The make-or-buy desion is the action of deciding between manufacturing an items internally and buying it from external suppliers).

The decision of make or buy depends upon the following :

1. Volume Requid :

When only few units are required, it may be more economical to purchase them from outside supplier, because when we need few quantity of product a larger production set up is required which is not economically.

2. Economical Advantages (Cost consideration) :

The decision of make or buy depends on the comparision between known cost (price charged by the vendor) & an estimated unknown cost (cost of making product in factory). If there is negligible defference between the two costs, the item should be purchased also compare the transportation cost and inventory cost.

3. life of the product :

If the quantity of product is less and life of product is average then we should buy the product from outside rather than manufactured inside the factory.

4. Quality consideration :

Compare the quality of purchased item and the quality that the company could have achieved, when the company made it own. If there is no very much variation in the quality, then either we can make or buy the product.

5. Degree of production standardisation :

~~For the product processes required costly research~~

For the products which are highly standardized and form speciality of some industry (eg- screw, nuts, bolts, washers etc), then we should purchased them.

6. Degree of manufacturing specialization :

Certain processes require costly research and many years to developed. In addition expensive plants and equipments are necessary for the manufacture of these items by specialised process. Such parts should be purchased from the specialized industries. For example an automobile industry may buy tyres from rupper industry, crankshaft,

piston, carburators, spark plug, ball bearing etc.

7. Emergency :

At the time of emergency some parts may be urgently required then we should buy the product from outside rather than manufactured in the factory.

8. Seasonal Variation :

Seasonal variation in demand are common to many industries, (e.g. industries manufacturing ~~process~~ fans, refrigerators, umbrellas, rain coats, sweaters, coolers etc). For such industries at the time of peak demand, it is more economical to purchase extra capacity from other industries.

9. Reliability of supplier :

If the suppliers for the component parts are not reliable then it should be manufacture these parts in the factory, because it stop the production line.

Plant Capacity :

Plant capacity is the rate of output of a plant. i.e. the maximum number of products are manufactured in a given time (per year, per month or per day). Plant capacity is also known as production capacity. It is also defined as the volume or number of units that can be manufactured during a given period.

Plant capacity is expressed in terms of "available hours" per day, per week, per month.

For example -

(1) In steel industry the output can be expressed in terms of tonnes of steel per day, weeks or month.

(2) The capacity of the tractor manufacturing industry may be expressed in terms of number of tractors manufactured per month or per year.

In case of single product plants, the output can be expressed in terms of number of units produced in a given time. In case of multi product plant (An automobile company manufactured car, trucks etc), the plant capacity will be expressed in terms of annual sale in term of rupees.

But, now a day plant capacity is expressed in terms of "available hours" per day, per week, per month etc.

For power plant capacity it is necessary to understand two factors:

1. Plant efficiency factor 2. Scrap factor

1. Plant efficiency factor / utilization capacity: A portion of the available hours cannot be used because of sheduling delays, machine breakdown, preventive maintenance etc. So plant capacity is defined as the ratio of useful productive time to total working time. (range 0.5 to 0.95)

2. Scrap factor: In any production some defective or bad products are produced. Therefore, while consideration the plant capacity scrap factor must be taken into consideration. It is defined as the ratio of number of scraped (defective) units to the total number of units

production scrap factors may vary from 4 to 15%.

Factors affecting plant capacity :

1. Technological Requirements.
2. Input constraint
   The important input are power supply, raw materials etc.
3. Investment cost
4. Market conditions
5. Resources of organisation
6. Government policy.

Formula to calculate plant capacity,

$$\text{Production (no. of product)} = \frac{\text{No of machine} \times \text{Machine Capacity (hours)} \times \text{utilization capacity}}{\text{Standard cycle time (hours)}}$$

Machine capacity means how much time we can run the m/c standard cycle time - time taken to produce a product from a machine.

Machine Capacity

Machine capacity is defined as the maximum output that a machine can produce by performing a specified method of operation in given ~~cycle~~ time. Every management tries to obtain as much as output from a machine as possible and utilize the machine fully.

Machine capacity depends upon many factors :—

1. cycle time : cycle time is the time required in minutes/ second to complete one job.
   Cycle time = Preparation time + Inspection time.
2. Available time : total time in one day or in one shift
3. Man efficiency (manual or semi automatic 50-85%, fully automatic m/c - 90-100%).

$$\therefore \text{Machine Capacity} = \frac{\text{Available time} \times \text{efficiency of types of machin}}{\text{Cycle time}}$$

Process Engineering: In process engineering we study about the conversion of raw material into finished product by appling different manufacturing process. In process engineering we determine the process by which a product is to be manufactured economically within the limit of design specification. It begins when product design is completed.

Function of process engineering

After getting the design of product from the design department we have to decide -

i). The basic manufacturing process

ii). Sequence of operation

iii). Equipments and tools are required

iv). Inspection stages (Testing the final product).

PART PRINT ANALYSIS

When we manufactured any product, the process engineer take the input from the design department in the form of drawing and other information (manufaturing) like dimension, shape, size, material etc. A detail study of part drawings for the manufacturing of the part is called as part print analysis.

In part print analysis it give a detail information about the finished shape, dimension and size of the parts, the materials needed, the tolerances allowed & the no. of parts required in the final product.

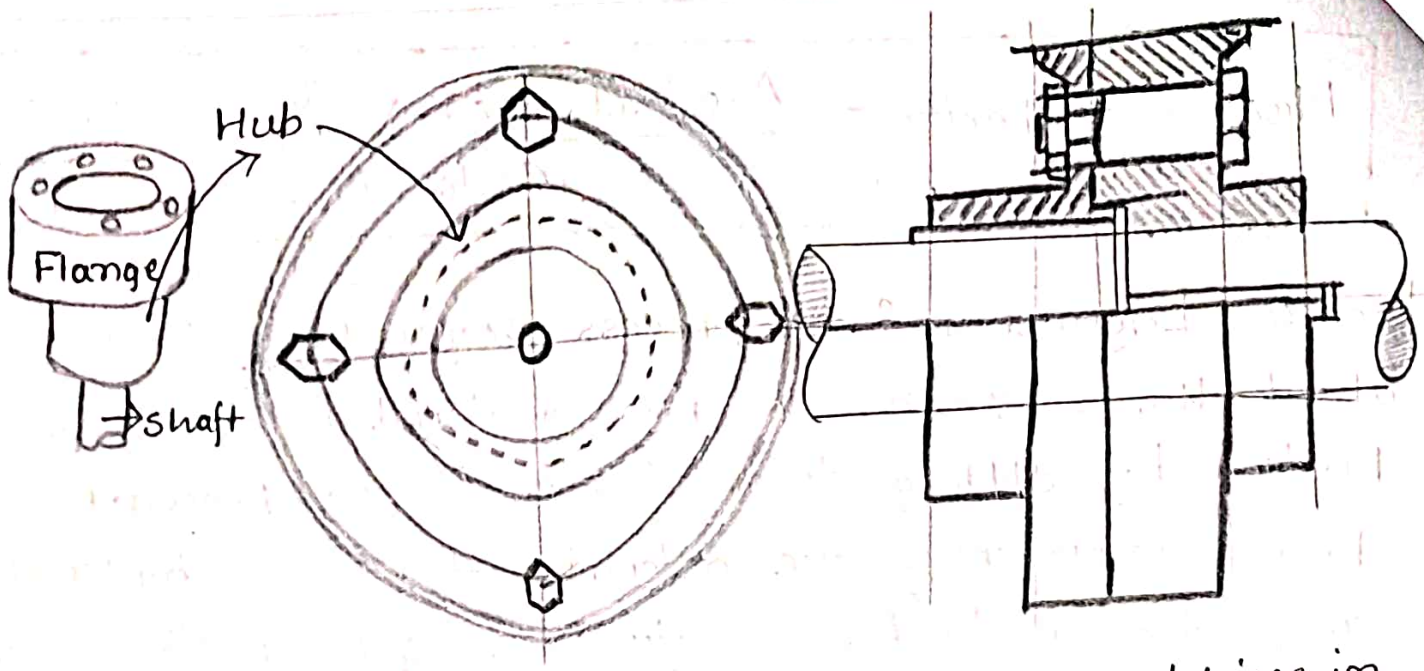

Establishing the general characteristics of work piese in part print analysis :

1. The general description of the part : When a product is manufactured then several parts are required, so a description of number of part, clear drawing of assembly and sub assembly are provided.
2. The general configuration of the part : To avoid any misunderstanding in the part size, a full drawing of assembly and sub assembly parts with proper dimension (scale), shape and size are given which help the process engineer during manufacturing. The scale and general configuration are present in title block.
3. The material from which the part is made : A detail information are given regarding the material from which the part are to be made. Material specification are given in the title block.
4. Type of operation is to performed : After the selection of material, process engineer determine the type of operation are to be performed like casting, forging, machining etc
5. Testing & improving the design : Proper testing is conducted and if any failure takes place, then change or improve the design and recorded all the information.

Functional Surfaces of The Workpiece:

The surfaces (either circular, rectangular, flat etc) which must be developed on the workpiece during the process of manufacturing are known as the functional surfaces. Consider a workpiece to be machined and compare with other finished machined surface. The areas which must be machined are identified from the part prints in three major ways.

a) Surface Finish: The standards for surface finish & their symbols are shown on the product drawings are very useful to the process engineer in determining which surface must be machined.

b) Basic Geometry: The machining is identified by the basic shape of the part. A particular degree of roundness, squareness, flatness, parallelism or other specific descriptions of shape help in recognizing machined surfaces.

c) Tolerances: Tolerance indicate the margin of error that can be tolerated in manufacturing & still considered as the acceptable part.

Nature of work to be performed:

The description of any job usually determines the nature of work. Nature of work to be performed means an examination of the part print leads to the nature of work to be performed. The sequence of operations that must be performed on the workpiece to produce the part to its print specifications. The characteristics of the workpiece affect economy of production.

Finishing & Identifying Operations

Finishing operations are the processes that are applied to the workpiece at the end of a manufacturing process. Finishing operations involve polishing, grinding etc which reduce the surface roughness, eliminat wrinkling, and any projection in order to enhance (improve) the surface texture and provide a better surface finish to the work surface.

Depending on the workpiece and geometry, various kinds of surface finishing operations are applied such as :-

1. Polishing : Making surface smooth.
2. Grinding : Grinding helps to remove any irregularities in the workpiece surface, such as removing a molding joint.
3. Powder Coating : To make the workpiece durable & give thick coating.
4. Planting : The finishing process requires adding a type of metal onto the surface of the workpiece.
5. Anodizing : It is the process of adding an outer coating (layer) on the workpiece which protect it from corrosion. Electrolytic processes are typically used and add a hard oxide layer to the workpiece.
6. Acid Pickling : This finishing process is where irregularities on the workpiece surface are removed by using some type of acid, as when removing scale from a metal workpiece.

Categories of Finishes

The finishes can be broken down into three different categories based on what is being done to the workpiece:

1. Remove Material ; Laser engraving, Grinding, Polishing is a good example of this categories.
2. Add Material ; Power coating, Planting and anodizing would fall under this category.
3. Alter the surface ; Pickling are finishing processes that would fit in this category.

There are many benefits of surfacing finishing :-

- It improve the product appearance.
- It gives the product long life.
- Improve resistance to corrosion, chemical resistance.
- Increases the strength of material. (Electroplating)
- Makes It easier to apply Paint/Coating.
- Reduces friction
- Improve resistance to wear
- Remove defects in the surface.

Dimensional Analysis

Dimesional analysis is also known as factor-label method or unit-factor method. It is a method to convert one system of unit into another. To convert from one unit to another, we make use of conversion factor, which is a numerical quantity that we can multiply or devide to the number or quantity that we want to convert.

for example - Convert 5.2 meter into cm,

$n_1 u_1 = n_2 u_2$ whe n - numerical, u = unit,

$$n_2 = \frac{n_1 u_1}{u_2} \Rightarrow n_2 = \frac{5.2 \times 100}{1} = \underline{\underline{520 \text{ cm}}}$$

Types of dimensions

- Dimension is a numerical value which is expressed in appropriate unit for the measurement and used to define the size of the object; location, orientation or other geometric characteristics of a part.
- It is mainly used to know the object size, the name of parts and diameter of the hole etc.
- Dimension s fall into two types –

→ size dimensions and
→ location dimensions.

- Size dimensions are used to provide the measurements for the size of component or objects. Size dimension are clearly marked on the drawing.
- Location dimensions are used to locate the position on component and objects.

Chain Dimensioning

It this type of dimensioning the dimension lines are arranged in a straight line. Each section are dimensional alone and all dimension line are along same line action.

Parallel Dimensioning

In this type of dimesioning all the dimension lines are draw from a common base line. In this type of dimmensioning line are parallel to each other so it is called parallel dimensioning.

Dimensional Analysis

Dimensional analysis is concerned with the interpretation of different dimensional qualities like flatness, straighness, concentricity etc demand by the product from the part print so that an acceptable product should be manufactured.

Types of dimensions :-

There are two types of dimensions

- Linear or Coordinate Dimension
- Angular Dimension

Linear or Coordinate Dimension

- A linear dimension measures the length of a line or the distance between two points or elements.
- We can place linear dimensions with the coordinate or distance between two points.

Angular Dimension

- An angular dimension measure angle of a line, the sweep angle of an arc or the angle between two or more lines or points.
- We can place angular dimension by specifying the angle between two points.

Measuring the geometry of the form

The different geometry of the form needed to be measured in order to make a perfect part as per part print requirement are as follows :

1. Flatness
2. Parallelism
3. Straightness
4. Angularity
5. Roundness

1. Flatness

- Flatness is defined as the permissible surface deviation from a plane.

2. Parallelism

- Parallelism is the condition which exists when two or more planes or straight lines extend in the same direction and are equidistant at all points.

3. Straighness

~~The concept~~

Straightness may apply to eithe an axis (centre line) or a surface other than a plane. When the straightness notation on the part print is applied to an axis, as in the case of the cone, the axis must lie within a cylinder .003 diameter.

4. Angularity

Angularity is the tolerance applied to control the angle at which a line or surface must lie in relation to a given datum. The term angularity applies only to oblique angles.

Angularity tolerance may be expressed in two ways;
by a circumferential tolerance and
by a geometric tolerance.

5. Roundness

The term roundness implies a condition in which all points of a surface are equidistant from the point or axis about which they are generated.

Baseline

Baselines is a line on the part print which help to relate the surfaces of the part in such a way that tolerances & tolerance buildups can be adequately controlled.

A baseline may be compared to the datum used in measuring geometry of form. When dimensions are related to a common baseline or datum, it becomes possible to maintain a higher degree of control over the workpiece.

Direction of specific Dimensions

The placing of an arrowhead at each end of a dimension line only indicates that the distance between two surfaces is the same regardless which direction along the dimension line it is measured. It does not indicate which surface is control surface. Thus knowledge is neccessary to select the proper surface in each step of process and a specific direction of the dimension is to be done in order to reduce the tolerance and produce a part within its specification.

Tolerance Analysis

Tolerance analysis is also known as variational analysis is the process of determining how much a manufactured product's components can vary in their dimensions and geometry (in other words their tolerances) and still work together as per requirement.

Two part can never be produced exactly a like even under the most closely controlled condition thus a slighly change in dimension from workpiece to workpiece will always be found, this condition is known as workpiece variation.

Causes of Workpiece Variation

- The machines which perform the operations on the workpiece may have inherent inaccuracy built into them.
- The tools used on the machines are subject to wear, chipping, breaking and difference created due to regridings leads to variation.
- The manufacturing techniques utilized in the process are subject to variation like sand casted product may vary in composition or shape from piece to piece.

- The human element contribute greatly to workpiece variation. Errors in reading machine settings or inability of the operator to make pefect settings.
- Workpiece variation also may be caused by chance,

Terms used in workpiece dimensions

Nominal size: It is the size of a part specified in the drawing as a matter of convenience.

Basic size: It is the size of a part to which all limits of variation (ie tolerances) are applied to arrive at final dimensioning of the mating parts. The nominal or basic size of a part is often the same.

Allowance: It is the difference between the basic dimensions of the mating parts. The allowance may be positive or negative. When the shaft size is less than the hole size, then the allowance is positive and when the shaft size is greater than hole size, then the allowance is negative.

Tolerance: It is the difference between the upper limit and lower limit and lower limit of a dimension. In other words, it is the maximum permissible variation in a dimension. The tolerance may be unilateral or bilateral.

Limit: Limits are the extreme permissible dimmensions of a part.

Types of tolerance

A tolerance can be expressed in two ways:-

1. Unilateral Tolerance
2. Bilateral Tolerance

- A unilateral tolerance is one in which the total allowable variation from the basic size is in one direction only. It may be either plus or minus but not both.
- A bilateral tolerance is one in which the allowable variation from the basic size is in both plus and minus direction.

Tolerance Stacks

- A tolerance stack occurs when accepted tolerances on individual dimensions combine in such a way as to create an unacceptable variation in an over-all dimensional relationship.
- When extreme permissible tolerances combine, the condition is called a limit stack.
- Tolerance stacks can be divided into two basic categories:
  - Design tolerance stacks and
  - Process tolerance stacks

- A design tolerance stack is one that is created by the product designer and is found on the part print. When a design tolerance stack occurs, it should be eliminated if at all possible because it can affect badly the functioning of the part or assembly.

- A process tolerance stack is a result of improper processing. It occurs when the basic principles of process planning are not observed. The result is that a faulty part may be produced even though no tolerance stack condition is apparent from the part print.

Workpiece Control

The workpiece must be produced within the tolerance shown on the part print and to maintain part print tolerances, the workpiece must be correctly positioned while work is being done thus the variation of dimensions on the workpiece is directly related to the variation in workpiece position and various technique used and applied by a process engineer to limits variation in workpiece positioning is reffered as work-piece control.

Several theories and techniques used by the process engineer to maintain workpiece control are:

1. Equilibrium Theories
2. Concept of location
3. Geometric control
4. Dimensional control
5. Mechanical control.

Equilibrium Theories

- To obtain the objectives of workpiece control, a state of equilibrium exist. Equilibrium can be described as a balance of the forces applied on object. The object is at rest when in equilibrium.
- Two types of equilibrium are necessary
  - Linear and
  - Rotational.
- The process engineer accomplishes equilibrium by the placement of locators and holding forces. The holding forces is provided by some clamping device (locators) designed by the tool engineer. The equal and opposite moments are likewise provided by stationary locators. These locators are gauges designed by the tool engineer

Linear Equilibrium

With one forces applied, the object would be unbalanced & movement would occur in the same direction. This movement is along a linear path. To obtain equilibrium, an equal & opposite force must be applied. Equal and opposite forces completely counteract each other and no tendency for movement exists. Since linear movement has stopped, a state of linear equilibrium has been obtained.

Rotational Equilibrium

If the applied force was offset from the centre, the body would tend to rotate, because the force is offcentre, a moment exists to rotate the free about its center. A state of unbalance exists and rotation will occur. The moment is calculated by mutiplying the force times the moment arm. To obtain equilibrium, an equal and opposite moment must be provided. Equal and opposite moments completely counteract each other and a state of rotational equilibrium exists.

Geometric control

Geometric control is concerned with stability of the workpiece. In geometric control we locate the position of workpiece which is not deflected by holding force, tool force etc.

Geometric control is that control relating to the stability of the workpiece. If the workpiece is unstable when placed on the locators, the workpiece tends to lift or rock away from one or more locators. The holding force may clamp the workpiece without full contact against all locators. Workpiece control or accuracy of position is poor

Dimensional Control

- Dimensional control is concerned with tolerance. Dimensional control determines part to part variations & clearance between two parts.
- Dimensional control as that control relating to the maintenance of physical dimensions as specified on the part print. The workpiece must be produce within tolerance shown for each dimension.
- Dimensional control is accomplished or made by the correct placement of locators (clip pin). This is a primary responsibility of the process engineer.

Mechanical Control

- Mechanical control is concerned with control of the effect of cutting forces on the workpiece.
- Mechanical control is that control which is relating to the proper application of forces on the workpiece. This control also is concerned with the placement of locators to a limited extent.
- To obtain the best mechanical control of the workpiece the process engineer must:
  1. Correctly position holding forces
  2. Correctly position supports
  3. Correctly position locators.

Unit - 2 Production Forecasting

Forecasting: Forecasting is the process of determining what is going to happens in the future by analysis what happened in the past and what is going on now means present data. It is the first step in planning.

Production Forecasting :

- Production forecasting estimates the future demand for the product to sell and the resource required to manufacture the product.
- Production forecasting is the estimation of future demand for products (company goods) and services. It also predicts the number of resources that are required to manufacture the product. Resources could be men, money, material, machine, method, market. It is also known as demand and sell forecasting.

Types of Forecasting

There are three types of forecasting on the basis of time:

1. Short-term Forecasting
2. Medium-term Forecasting
3. Long-term Forecasting

Short-term forecasting: The forecasting which covers a period of three month, six months or one year is generally called as short term forecasting (usually less than 3 months). This types of forecasting is done when the demand fluctuates from one month to another. This types of forecasting is used in purchasing of raw material, Job-scheduling, Job assignment and production level.

Medium term forecasting : This type of forecasting generally covers a period of three months to 3 yearee. It is used in sales planning, regarding planning for product, inventory planning, cash budgeting (quaterly or yearly) and analysing various operating plans.

Long - term forecasting : This types of forecasting usually covers a period of 5 to 10 years and in some cases even 20 years. It is used in business planning, in new product ~~electricity~~, ~~petroleum refinary etc... a long term fore~~ planning and development (Reasearch and development project), generation of electricity, petroleum refinary etc... a long term forecasting is needed because capital cost, machine cost is very high.

This type of forecasting is done by technological and economical forecasing.

Elements of Good Forecast / Requirement of a Good forecast

1. The forecast should be accurate and the degree of accuracy should be known.
2. The forecast should be timely.
3. The forecast should be reliable.
4. The forecast should be expressed in meaningful unit such as rupees, unit of products, machine & skill needed.
5. The forecast should be in written form.
6. The forecasting techniques should be simple to understand and use.

Objective of production forecasting

1. It make a suitable production policy so that problems of under production or over production may not arise.
2. Regular supply of raw material, on the basis of estimated sales and size of inventory (storing capacity) at lowest level (economical).
3. Best utilization of machine :
   The operation can be so planned that the machine are utilized to its maximum capacity.
4. Man Power Planning :
   Accurate forecasting help the management to select the correct manpower requirement.
5. Accurate forecasting setting the production and sales target.

The strategic role of forecasting in supply chain

A supply chain consists of a series of activities (network) involving many organizations through which the material moves from initial suppliers to final costomers.

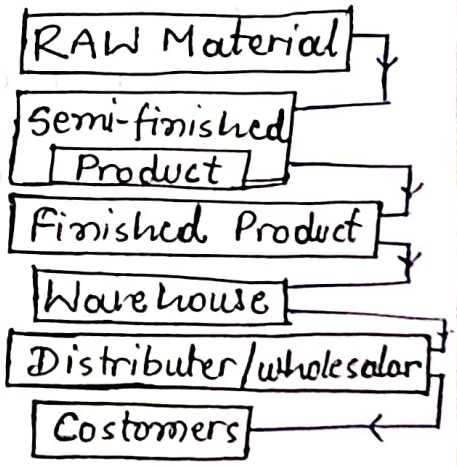

The strategic or steps involved in the forecasting may vary from company to company, because the nature of the business and the product are not similar for each enterprise. Market conditions also vary from company to company and from product to product.

1. Select the best suppliers of raw material and semi-finished product from which final product will be manufacture.

2. Proper inventory control (storage area) for raw mate intermediate goods, and finished products. (ie accurate forecasting determines inventory levels in the supply chain)

3. Deciding the manufaturing operation and services provided.

Manufacturing operations converts inputs like materials, labur and capital into tangible output. Manufacturing operations are :-

a) forming process - Casting, forging, ectrusion etc.

b) Machining process - remove the material from the workpiece during cutting operation, turining, drilling, boring, milling and grinding, EDM (electro-discharge machining).

c) Assembly process - welding process; brazing, soldring, réveting etc.

4. Proper advertisement and promotion of product.

5. Proper selection of distributer and wholeseller.

6. Improve quality and effectiveness of product.

7. Select the best and cheapest transportation facilities.

8. Planning for making new product; equipment investment and expansion of the organization.

Forcasting Approaches / Forcasting Methods

The two general approaches to forecasting are:

1. Qualitative Forcasting
2. Quantitative Forecasting

Qualitative Forecasting

- This type of forecasting is done when historical data is not available.
- This type of forecasting is used when a new technology and product is introduced.
- Generally used when data are limited or unavailable (no past data is available). It is also known as technological, subjective or judgemental forecasting. It is used for long term forecasting (2-3 years or more).
- Forecasting depends on skill and experience of forecaster and available information.
- This forecasting is depends upon human judgement, expert opinions, subjective and non-mathematical.

Quantitative Forcasting

- In this type of forecasting we uses historical (Past) data on the assumption that past partterns will repeat in the future.
- Quantitative forecasting is an objective, data-based mathematical process by which sales and production teams uses historical (past) data and patterns to makes accurate predictions to guide future business decision.
- Quantitative forecasting takes historical sales & demand data & combines it with mathematical formulas to determine future performance. It is also known as statical demand forecasting (depend on data and analytical techniques). It is used for short term forcasting (2-6 months).

Qualitative Forecasting -	Quantitative Forecasting
1 used for long term forecasting	1. used for short term forecasting
2. Subjective forecasting	2. Objective forecasting
3. Used for new product and new technology	3. For old product (existing product) and current technology
4. No past date is provided or required.	4. Past data is required.
5. Major changes is possible or expected.	5. No significant changes is posible.
6. Based on human judgment expert opinions, market survey etc.	6. Based on mathematical techniques, data is available data analytical techniques.
7. More Risk	7. Less Risk.
8. Example - forecasting for e-commerce sales, construction of new project etc.	8. Example - forecasting sales of color T.V., bikes, car etc.

Qualitative forecasting method :

Jury of executive opinion :- Decision making or opinions are given by small group of high-level executives (manggers).

Delphi method :- Group of expert of different field + staff

Market survey method :-

Sales for composite method :-

Qualitative forecasting method :

Time series models :-

(i) Naive approach

(ii) Past average method

(iii) Moving averages method

(v) Exponential smoothing method

Econometric or casual / causal method :-

Qualitative Forecasting Method

1. Jury of executive opinion / Executive method

- In this type of forecasting technique the opinions is given by a small group of high-level managers.
- In this type of forecasting the experience and knowledge of two or more managers, can be used fore forecasting the demand of new product. This forecasting is simple and easy to understand because forecasts are based on the experiences of experts, who are directly involved in the system.
- In this method opinion is given by marketing finance and production manager. By through averaging of these opinions, the final forecast is made. Quick forecast, less expensive and take 1 to 4 weeks time periods.

2. Delphi method

This method can be used to develop long-rang forecasts of product and sales projection for new products. In this type of forecasting a panel of 5 to 10 experts from inside and outside also staff are involved. In this type of forecasting a series of questions and answers is generated by a panel of experts. The final forecast is obtained by the common opinion of all the expert. It is the best method of forecasting. Experts are company managers, trade associations wholesaler, retailer staff.

3. Market Research Method / Consumer surevey or market survey

This is a systematic approach to determine consumer ~~survey~~ interest in a product or service by conducting a consumer survey and many options taken by consumer. This method may be used to forecast demand for the short, medium and long term. In this type of forecasting it give more preference to the consumer opinion rather than exective opinion.

4. Sales composite method

This method is also known as pooled salesforce estimates ~~are combined~~ method. Each sales person estimates what sales will be in area (territory). This estimates are combined at the direct and national level to forecast all the thing, like production, inventory, distribution and sales staffing. It is an example of bottom-up or grass root approach.

Quantitative Forecasting Method

1. Time series method / Extraplation method (based on time interval)

Time series models predict on the assumption that future is a projection of the post. A time series is a time-orderd sequence of observations taken at regular interval of time (e.g. hourly, daily, weekly, monthly or annually). The data may be measurement of demand, earning, profit, output, productivity, consumer price index etc.

The important time series model are:-

(i) Naive Approach
(ii) Past Average
(iii) Moving Average Method / Moving Past Average
(iv) Weighted Moving Average Method
(v) Exponential Smoothing Method

2. Causal Method (Demand Depend on Various Independent Factor)

example;

$$Y = a + bX$$

Where,
Y = Demand
X = Independent Factor

(i) Naive Approach

It is a basic or simple method. Naive forecasting is the last period's sales or demand are used for the next periods forecast without predictions or adjusting the factors.

i.e.- In this type of forecasting we assume that the demand in the next period is equal to the actual demand in the current period.

for example :- If the actual sales for a product in January 2022 is 100 units, the forecast demand for February 2022 will also be 100 units.

Advantage of this method :-

(i) Simple to calculate
(ii) Low cost method
(iii) Less time required
(iv) Give accuracy for short term forecasting

1.- Example for the naive model, find the forecast of april month.

Month	Actual Sales	Forecasted sales
Jan.	34	34
Feb.	37	37
March.	44	44
April.	?	

2.- Example for the naive model,

Week Periods	Sales in (thousand) or demand in unit	Forecast
1	9	
2	8	
3	9	
4	12	
5	9	
6	11	
7	?	11

2. Simple Average / Past Average Method

In this type of forecasting method we assuming that the demand in the next period will be equal to the average of the past demand in the next period will be equal to the average of the past demands or sales.

i.e. In this type of forecasting we calculate the average or mean of the actual demand data for the previous period.

$$\bar{X} = \frac{\text{Sum of demands for all past periods}}{\text{No. of periods}}$$

1. example – If a mobile communication company sales 100, 110 and 96 mobile connection in the month of jan, feb and march respectively. Find the demand for april.

Period	Sales/Demand	Forecast
Jan.	100	
Feb.	110	
March.	96	
April.	?	$\frac{100+110+96}{3} = 102.$

2. Find forecast of april and July by past average method.

Period	Demand	forecast
Jan.	110	
Feb.	120	
March.	130	
April.	?	$\frac{110+120+130}{3} = 120.$
May.	110	
June.	140	
July.	120	
August.	?	$\frac{110+120+130+120+110+140+120}{7} = 120.$

3. Moving Past Average Method

In this types of method we uses a number of most recent past actual data values to calculate a forecast. In this method the older demand from the previous average is replaced with the most recent demand and then the average is calculated.

$$\text{Moving Past Avg. Method} = \frac{\text{Sum of demand in previous } n \text{ periods}}{\text{Chosen number of period } (n)}$$

n may be 3, 4, 5 or 6

For example, we use a 3 month moving past average me

month (period)	actual demand	forecast based on moving avg.
Jan.	d_1	
Feb.	d_2	
March	d_3	
April	d_4	$\frac{d_1+d_2+d_3}{3}$ (forecast for month 4)
May	d_5	$\frac{d_2+d_3+d_4}{3}$ (forecast for month 5)
June	d_6	$\frac{d_4+d_5+d_6}{3}$ (forecast for month 6)
July	?	

ie- A forecasting method that uses an average of the 'n' most recent periods of demand data to forecast the next period demand.

1. Q. Calculate the forecasting of april and may by moving average method

Month	Actual sales/demand	3-month moving Avg. forecast
January	120	
February	130	
March	110	
April	?	$\frac{120+130+110}{3} = 120$
May	?	$\frac{130+110+120}{3} = 120.$

2. Q. Determine the forecast of demand for the 7th month using 3 month past moving average method.

Month	1	2	3	4	5	6
Demand (unit)	120	130	110	140	110	130

Period (month)	Demand (unit)	Forecast
1	120	
2	130	
3	110	
4	140	
5	110	
6	130	
7	?	$\frac{140+110+130}{3} = 126.7$ unit.

(v) Exponential Smoothing method

It is a time series method ~~and~~ are most effective. It give larger weightage to more recent observations and the weightage decrease exponetially as the observations become older.

- It requires only three items of data last month actual demand, last month forecast and smoothing constant.

$$\boxed{F_t = F_{t-1} + \alpha (D_{t-1} - F_{t-1})}$$

Where, F_t = New forecast

F_{t-1} = Previous period forcast

D_{t-1} = Previous period actual demand

α = Smoothing (weighting) Constant $\alpha = \frac{2}{n+1}$

- The value of varies from 0 to 1, n = no of period Commonly used values of a ranges from 0.05 to 0.5.

- Exponential smoothing forcast is the old forecast plus an adjustment for the error that occured in the last forecast.

Qn. A company predict the sales for a product as 150 units for february 2003. Actual for february 2003 was 158 units. Using a smoothing constant of 0.3, forecast the demand for march 2003.

Given data,

$F_{Feb} = 150$ unit

$D_{feb} = 158$ unit

$\alpha = 0.3$

$\because F_{March} = F_{Feb} + \alpha (D_{feb} - F_{feb})$

$= 150 + 0.3 \times (158 - 150)$

$= 150 + 0.3 \times 8$

$= 150 + 2.4$

$= \underline{\underline{152.4}}$

Qn. The sales of a product during the last four years were 860, 880, 870 and 890 units. The forecast for the fourth year was 876 units. If the forecast for fift year using simple exponential smoothing is equal to the forecast using a three period moving average the value of the exponential smoothing constant is?

$F_{5th} = F_{4th} + \alpha (D_{feb} - F_{feb})$

$= \dfrac{F_{4th} + 3rd + 2nd}{3}$

$= \dfrac{890 + 870 + 880}{3} = 880$

$\therefore 880 = 876 \times \alpha (890 - 876)$

$\alpha = \dfrac{4}{14} = \underline{\underline{0.285}}$

(vi) Weighted moving average method: A forecasting method that give more weight on recent data and less on past data.

In the weighted moving average method, east past demand in the moving average can have its own weight and the sum of the weight is equal to one. ie average is obtained by multiplying the weighted of each period by the value for that period and by adding the product together.

for example; In a 3 period weighted moving average method model, the most recent period might be assigned a weight of 0.5, the second most recent period might be assigned of 0.3 and third most recent period with a weight of 0.2. (we assume it randomly)

$$\text{forecasting}, f_{t+1} = \frac{\omega_1 d_t + \omega_2 d_{t-1} + \omega_3 d_{t-2}}{\omega_1 + \omega_2 + \omega_3}$$

forecast of demand for 7th month,

$$f_7 = f_{6+1} = \frac{\omega_1 d_6 + \omega_2 d_5 + \omega_3 t_4}{\omega_1 + \omega_2 + \omega_3}$$

Qn. If the weightage given for the demand for 6th, 5th & 4th months are 0.5, 0.3 and 0.2 respectively, determine the forecast of demand for 7th month using weigitage moving method.

Month	1	2	3	4	5	6
Demand	120	130	110	140	110	130

$\because \omega_6 = 0.5, \quad \omega_5 = 0.3$ and $\omega_4 = 0.2$

$$\text{Forecast}_7 = \frac{\omega_6 d_6 + \omega_5 d_5 + \omega_4 d_4}{\omega_6 + \omega_5 + \omega_4} = \frac{0.5 \times 130 + 0.3 \times 110 + 0.2 \times 140}{0.5 + 0.3 + 0.2}$$

$$= \frac{65 + 33 + 28}{1} = \underline{\underline{126}}$$

Producting planning involves three important parts.

(i) Routing

Prescribed the sequence of operation required to transform input into desired output.

(ii) Scheduling

When and where each operation of the production process is to be performed.

(iii) Loading

Define as the relationship between load (assign work) and capacity (time available to work), so as to assign work for the production

Production planning

In production planning we plan the work. Forcasting all the steps involved in the operation like preparation of budgets, manufacturing method to be used, type of machine and tools to be used, estimating men, machine, materials requirements.

Production process prepare or findout all the problems that may arise and decides in advance how to solve it.

Routing :-

- It is a first step in production planning and contro. In routing process, we deciding the path (route) of work and the sequence of operations.
- The main objective of routing is to determine the best and where cheapest sequence of operation & to ensure that this sequence is followed in the factory.
- Routing defines what work has to be done and where it has to be performed and how it will be done. It is the process of determining the sequence of operations to be performed in the production process, select the correct path or route by which raw material is converted into finished product through various production process.

- The routing function specifies the operations to be performed in the production process, their sequence on the machine or equipment and tools to be used to carryout the operation and the kind of worker needed to carryout the operation.

Routing procedure

The following steps are involved in routing:-

(i) Analysis the product to determine the materials and parts required for manufacturing the product.

(ii) Determination of the manufacturing operations required & their sequences.

(iii) Machines to be used and their capacity is also listed.

(iv) The quantity of the parts to be manufactured, in each batch & lot.

(v) Deciding the inspection procedure for each operation.

(vi) Determining the allowed time for each operation.

Benefits of Routing :-

i. Efficient use of available resources.

ii. Reduction in manufacturing costs.

iii. Improvement in quantity and quality of output.

iv. Providing a basis for scheduling & loading.

Scheduling :-

- Scheduling determines when an operation is to be performed, or when work is to be completed. (i.e - start and finished times of jobs)
- Scheduling may be defined as the assignment of work to the facility with the specification of times (when to start & when to complete) and the sequence or order in which the work is to be done. The facility may be man power, machine or both.
- In scheduling we determine the time required to perform each operation and also all the operations from raw material stage to the finished part stage, as per sequence of operation

- Scheduling function ensures that the "right things" are at the "right time" with the right machine and tool and right people to create the product or service output through most efficient utilisation of resources.

Objectives of Scheduling.

(i) Maximum utilisation of men, machine and materials by maintaining a smooth flow of materials along the production line.

(ii) Reducing the manufacturing time.

(iii) To deliver products in time as per the delivery schedules committed to the costomers.

(iv) Minimize production and worker costs.

(v) Reduce setup cost.

(vi) Minimize job latness (delay).

(vii) Increasing the profit and output.

(viii) Minimize work in-process inventory. (ie minimum inventory carrying costs)

Loading :—

- A loading means the amount of work load (in term of labour hours or machine hours) that has been assigned to each person, machine, group of machine and department to perform properly.
- In loading we deciding which jobs should be assigned (given) to which operators, machine, group of machines or work places (departments) and also giving the quantity (amount) of work.
- Gantt charts are mostly used for loading distribution.
- Loading determines which department is going to do what work.

Objective of loading :-

i. Reduce set up time.
ii. Fix up delivery dates.
iii. Reduce waiting time for Jobs to be loaded on the machines.
iv. To balance the work load in a plant.
v. Reduce idle time of men and machine.
vi. Increase the efficiency of utilisation of the plant capacity.

Sequencing :-

- Sequencing means to determinig the order in which the Jobs or tasks are proceed so as to minimize the total processing time.
- Sequencing means the selection of an appropriate (correct) order in which a number of Jobs (operation) can be assigned to service facilities (machines or equipments), so as to optimize the optimize the outputs in terms of time., cost or profit.

Common Sequencing Rules

(i) FCFS (first come first served) :-
In this type of sequencing Jobs are proceed in the order they come to the shop or machines. The rule is commonly applied in service centres such as bank, sugar market etc.

(ii) SPT (Shortest processing time) :- Jobs with the shortest processing time are sheduling first.

(iii) EDD (Earliest due data) :- Jobs are processed according to the due data, earlier due data first.

(iv) LPT (Longest processing time) :

The job with the longest processing / operation time is scheduled as the first job to be loaded on the machine among the jobs waiting in queue

(v) Least slack job first :

In this rule highest priority is given to the job which has the least slack. Slack is the difference between available time and processing time for the job.

$$\boxed{\text{Slack} = \text{available time} - \text{processing time}}$$

(vi) Critical Ratio Rule :

The critical ratio rule is designed to give priority to jobs that have the most urgently needed work to meet the shipping / delivery schedule.

$$\text{Critial Ratio} = \frac{\text{Due date} - \text{Date now}}{\text{Days required to complete job}} \text{ or } \frac{\text{Due time} - \text{Time Now}}{\text{Time required to complete job}}$$

$$\text{or } \frac{\text{Days Remaining}}{\text{Days Required for processing}} \text{ or } \frac{\text{Time Remaining}}{\text{Time required for processing}}$$

Advantages or objectives of sequencing,

1. It minimise the total elapsed time between first and last job. (Elapsed time = processing time + idle time).
2. Minimizing idle time.
3. It reduce the production cost.
4. No overloading of men or machine.
5. Best utilization of resources.
6. Minimising customer waiting time for a product.
7. Meeting promised delivery date.

Monitoring :-

- Monitoring is a continuous management function and very essential to any project.
- Monitoring is a process of regular observation and recording of the activities at all level of management taking place in a project or in production to ensure that input deliveries, work schedule, targeted program and all other activities are proceding as per the planned and scheduling.
- Monitoring gives the knowledge of the entire manufacturing cycle points out any defect at all stages and prevent shipping delays. Propper monitoring gives better product quality, proper resources are used and improve decision-making.

Advanced Planning and Sheduling System (APS) :

- Advanced planning and sheduling system is a digital solution or tool that helps manufacturers to manage production planning and shoop floor scheduling. Using advanced algorithems to balance demand and capacity and make production schedules.
- Advanced planning and sheduling system help a manufacturing unit to manage all the resources for smooth production. It considers all the major production factors, including people machine inventory and cost.
- It generates realistic reports to help in analysis the unit production capacity and plan the next operation and production.
- It helps to identify the exact resources that are required for production. It helps the manufacturer to determine what to make, how much to make, when & where to make it.
- An APS system covers the entire supply chain.

Components of advanced planning & scheduling system

The important components of APS are :—

i. Planning of demand: By previous sales data, APS make accurate forecast. Demand planning allows the manufacturer to produce the exact quantity of product which reduced inventory cost and waste.

ii. Planning of production: Proper uses of all resources and carry out various activities without any interruption.

iii. Scheduling of production: Proper scheduling reduce inventory and load on labourer.

iv: Planning of distribution

v. Planning of transportation

vi Inventory planning.

Employee scheduling :- Employee scheduling is defined as the process of predicting employee need, arranging, improving managing and controlling the employee in the workplace, so that the project and business objectives are completed on time.

Benefits of employee scheduling :-

- Increasing productivity.
- Improving employee safety and health.
- Improving employee satisfaction
- Employee scheduling helps efficient operations.
- It helps to manage employee attendance & pay.
- Employee scheduling makes shift management efficient.
- Employees will take leaves from time to time.
- Create and maintain employee work shifts.

Break-Even Analysis or cost volume analysis

UNIT-3

- The fundamental objective of any business is to earn more and more profit.
- Profit mainly depend upon three factors namely cost of production, amount of output quantity (volume of product) and revenue (total selling cost).
- Break-Even analysis is a technique, which tells that how many quantity (or the minimum number of output product) must be sold so that the total revenue (sales income) is equal to the cost invested.
- Break even analysis give a relationship between total cost (fixed cost + variable cost), total selling cost (revenue) and output (no. of quantity).
- Break even analysis give a point called break even point, at the point the organization is neither in profit nor in loss. Break even point is also called "no profit no loss point".
- The point of intersection of the total cost line (T.C. = F.C+V.C.) and income line is called break even point.
- In break even analysis, margin of safety is the distance between break even point and the output will produce.

Break-Even Analysis Charts;

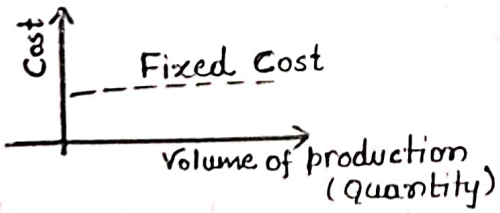

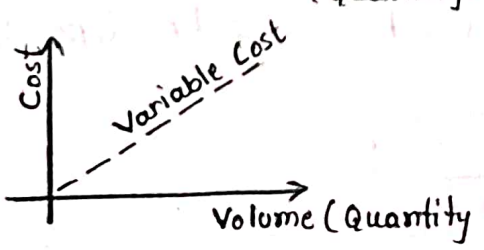

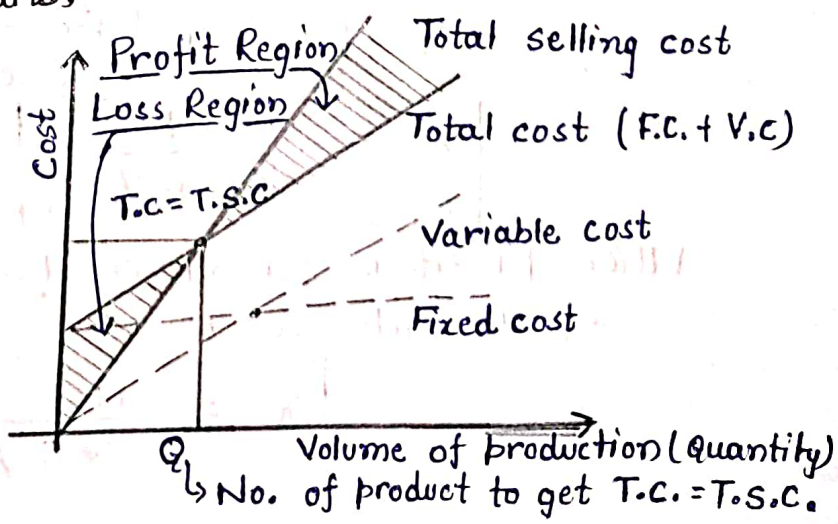

Terms in break even analysis;

(i) Fixed cost : It is the cost which is independent of volume or number of quantity to be produced.
i.e. Fixed costs do not vary when volume of output changes. For example, rent, property tax, bank EMI, staff salaries, electricity bill, equipment cost etc. It is denoted by F.C. or F_c.

(ii) Variable cost : Variable costs vary directly with volume of output. For example, material costs, labour costs.

$$V.C. = x \times \frac{V.C}{Unit}$$ where x = number of unit produced,
eqn of straight line; $y = mx + c$.

(iii) Total cost : Total cost is equal to the sum of the fixed cost and variable cost.

Total Cost = Fixed cost + Variable cost

$$\boxed{T.C. = x\frac{V_c}{unit} + F_c}, \quad y = mx + c, \quad \text{where, } VC = x\frac{V_c}{unit}.$$

(iv) Total selling cost (Total revenue): It is the sum of total cost and profit.

$$T.S.C = T.C + profit$$

$$T.S.C. = x \times \frac{S.C}{Unit} = Q \times \frac{S.C}{unit}$$

$$x \times \frac{V_c}{unit} + F_c + P = x \times \frac{S_c}{unit}$$

$$F_c + P = x\left[\frac{S_c - V_c}{Unit}\right]$$

$$\boxed{x = \frac{F_c + P}{(S_c - V_c)/unit}}$$

When profit is zero, $P = 0$ T.S.C = T.C. (At break point).
At break even point,

$$\boxed{x = \frac{F_c}{(S_c - V_c)/unit}}$$

(v) Margin : Margin is the difference between the break-even point and the output being produced.

Assumption in break-even analysis;

(i) The total cost of production can be devided into two categories ;- a) Fixed cost b). Variable cost

(ii) Fixed cost remain constant. ie independent of the quantity to be produced.

(iii) The variable cost is directly perpotional to the volume of production.

$$VC = x \times \frac{Vc}{unit} \text{ or } Q \times \frac{Vc}{unit}$$ Where, $Q = x$ = no. of unit produced.

(iv) The selling price does not change with change in the volume of sales.

(v) This deals with only one product.

Calculation of break-even point: Important formula.

1. In terms of physical units (Volume / Quantity):

The number of unit produced (Volume of production) to achieve the break even point.

Break even point,

$$x = \frac{F.C}{(S_c - V_c)/unit}.$$

Contribution per unit, $C = S.C - Vc$.

At BEP, Total expenditure = Total selling cost (Revenue)

2. In the terms of rupees of sales revenue,

$T.S.C = T.C + Profit$

$Tsc = FC + Vc + P$, at BEP, $P = 0$

$FC = TSC - Vc$ — ①

mutiplying both side by TSC

$(TSC)[TSC - Vc] = Fc \times TSC$

$$\boxed{BEP,\ x\ (\text{Sales}) \text{ or } (TSC) = \frac{FC}{(SC - VC)/TSC} = \frac{Fc}{C/TSC} = \frac{Fc}{P/V} \text{ ratio}}$$ [Profit Volume Ratio]

3. Profit Volume Ratio :

Profit volume ratio measures the profitability in relation to sales. It is defined as the ratio between contribution to sales.

$$P/V \text{ ratio} = \frac{\text{Contribution}}{\text{Sales}} \times 100 = \frac{Sc - Vc}{Sc} \times 100$$

or

$$P/V \text{ ratio} = \frac{\text{increase in profit}}{\text{increase in sales}} \times 100.$$

4. Margin of safety :

It is defined as the distance between the break-even point and the output being produced.

$$\text{Margin of safety} = \frac{\text{Profit}}{P/V \text{ ratio}} = \frac{\text{Profit} \times \text{Sales}}{\text{Sales} - \text{Variable cost}}.$$

Numericals

Qn. 1. A factory producing only one items, whithit sales for 12.50 per unit has a fixed cost equal to rupees Rs 60,000 and variable cost Rs 7.50 per unit.

Find out. (i) The number of unit to be produced to B.E.

(ii) No. of units to be produced to earn a profit of 12,000.

(iii) The profit if 25,000 produced and sold.

(i) Soln, no of unit, $x = \frac{Fc}{\frac{Sc}{unit} - \frac{Vc}{unit}} = \frac{60000}{12.5 - 7.5} = \underline{12000 \text{ unit}}.$

(ii) Soln no of unit if P = 12000, $x = \frac{Fc + P}{\frac{Sc}{unit} - \frac{Vc}{unit}} = \frac{72000}{12.5 - 7.5} = \underline{14400 \text{ unit}}$

(iii) Soln, $\because x = 25,000$ then, P = ? $\therefore x = \frac{Fc + P}{\frac{Sc}{unit} - \frac{Vc}{unit}} \Rightarrow 25000 = \frac{60000 + P}{5}$

$P = 125000 - 60000$

$= \underline{65,000 \text{ Rs}}$

Qn. 2. The following figure relates to a small manufacturing company;

Sales (Rs)	6,00,000
Varible Cost (Rs)	4,50,000
Fixed cost (Rs)	45,000

Calculate (i) BEP (ii) P/V ratio.

(i) Sol^n SC = 600000
VC = 450000
FC = 45000

BEP In terms of sales,

$$x_{BEP} = \frac{Fc \times Sc}{Sc - Vc} = \frac{45000 \times 600000}{600000 - 450000} = 45000 \times 4$$
$$= \underline{\underline{180,000 \text{ Rs}}}$$

(ii) $P/_V$ ratio $= \frac{Sc - Vc}{Sc} = \frac{600000 - 450000}{600000} = 0.25$ or $\underline{\underline{25.00\%}}$

Qn3. Calculate BEP in terms of quantity (unit) and in terms of sales revenue in rupees, if

Total Fixed cost = Rs 20000
Variable cost/unit = Rs 4
Selling cost /unit = Rs 8

BEP in terms of quantity,

$$x = \frac{Fc}{Sc/unit - Vc/unit} = \frac{20000}{8-4} = \underline{\underline{5000}}$$

→ Vc = 4 × 5000 = 20000 , Sc = 8 × 5000 = 40000

BEP in terms of sales revenue in rupees,

$$(x)_{sales} = \frac{FC \times SC}{SC - Vc} = \frac{20000 \times 40000}{40000 - 20000} = \underline{\underline{40,000 \text{ Rs}}}$$

Brake-even analysis for process, plant and equipment selection, Qn.

(i) Break even analysis for process, plant and m/c selection.

A break-even analysis is a financial tool which helps a company to determine the stage at which the number of products or services a company should sell/sale, or provide to cover it cost.

When we applying break-even analysis for process, plant and equipment selection, we first find out all the information needed to calculate the total cost of production using various processes. Now calculate and compare all the total cost of each process and select the best process.

$$\boxed{\text{Total cost} = \text{Fixed cost} + \text{Variable Cost}}$$

Qn.1. A company/component can be produced by any of four process I, II, III, IV. Process I has a fixed cost of Rs 20 & variable cost of Rs 3 per piece. Process II has a fixed cost of Rs 50 & V.C of Rs 1 per piece. Process III has a fixed cost of Rs 40 & V.C. of Rs 2 per piece. Process IV has a fixed cost of Rs 10 & V.C. of Rs 4 per piece. If the company wishes to produce 100 pieces of the component from economic point of view. Which process is more economical?

Process	Fixed Cost	Variable Cost/Piece	Total Cost = Vc + Fc
I	20	3	20 + 3×100 = 320
II	50	1	50 + 1×100 = 150
III	40	2	40 + 2×100 = 240
IV	10	4	10 + 4×100 = 410

Here, Process II is most economical.

Qn.2. Process X has a fixed cost of Rs 40000 per month and V.C of Rs 9 per unit. Process Y has a fixed cost of Rs 16000 per month and variable cost of Rs 24 per unit. At which value, total cost of process X & Y will be equal?

for process X and Process Y,

Let x be the amount of piece at which total cost of both processes are equal.

∵ In process X,

Total cost = Fc + Vc/unit

$$Tc_x = 40000 + 9x \quad -(I)$$

and in process Y,

Total cost = Fc + Vc/unit

$$Tc_Y = 16000 + 24x \quad -(II)$$

According to the question,

$$Tc_x = Tc_Y$$

$$\Rightarrow 40000 + 9x = 16000 + 24x$$

$$\Rightarrow 15x = 24000$$

$$\Rightarrow x = \underline{\underline{1600}}.$$

Qn. 3. Two alternative methods can produce a product. First method has a fixed cost of Rs 2000 and variable cost of Rs 20 per piece. The second method has a fixed cost of Rs 1500 & a variable cost of Rs 30. The break even quantity between the two alternative is?

In first process,

$$Tc_1 = 2000 + 20x$$

In second process,

$$Tc_2 = 1500 + 30x$$

$$\Rightarrow Tc_1 = Tc_2, \quad 2000 + 20x = 1500 + 30x, \quad 10x = 500,$$

$$\therefore \underline{\underline{x = 50}}.$$

Qn.4. In the production of a product, the fixed costs are 6000 and the variable cost is Rs 10/product, if the sales price of each product is Rs 12/product then, the break even volume of the product to be made will be?

given. $F_c = 6000$

$V_c/unit = 10$

$S_c/unit = 12$

Let, break even quantity/volume = x,

$$x_{vol.} = \frac{F_c}{\frac{S_c}{unit} - \frac{V_c}{unit}} = \frac{6000}{12-10} = \underline{\underline{3000 \text{ pieces}}}$$

Qn.5. If the fixed cost of the assets for a given period doubles, then how much will the break even quantity become?

If fixed cost get doubled then, b.e.q. become double.

Aggregate Production (Output) planning:

- Aggregate planning involves planning the best quantity of product in the intermediate range horizon (3 month to one year) and planning the lowest cost method. Aggregate planning involves in planning workforce size (quantity), production rates (work hours per week) inventory level.
- Aggregate production planning is the process of determining the quantity/output levels (units) of product, determines the resource capacity a firm (organization) will need to meet its demand over an intermediate time period in the future. The aggregate plan is also called production plan.
- A mass production units make a strategic and operational plans on each level to achieve their goals such types of plan is called aggregate planning.

For example,

Suppose a T.V. manufaturing company (firms) makes strategie and operational plan that how much television set are to be produced without considering the size and model.

Organization (firm) Company			
Aggregate production planning = 1000 unit			
Product A	Product B	Product C	Product D
200	400	300	100

- When we plan 1000 unit product without consider its model then it is called AAP (aggregate production planning).
- When we plan for independent production then it is called master production planning.

Objective of Aggregate planning:

(i) Minimizing cost of production and maximizing profits.

(ii) Minimize inventory investments.

(iii) Maximize utilization of plan and equipment.

(iv) Minimize ~~utilization of plant and co~~ changes in workforce levels,

(v) To develop an economic strategy to meet customer demand (Improving costomer service).

Aggregate planning or Aggregate capacity planning:

Aggregate capacity planning is the process of planning and managing the overall capacity of an organization resources in the intermediate time period. The main aim of aggregate capacity planning is to balance the capacity (all type of resources) and demand in a cost effective manner. Aggregate capacity planning should be such that it fulfield the present and future demand.

Importance of Aggregate capacity planning.

It is very important for an organization to understand the capacity of its resources. Aggregate capacity planning helps a company to maintain the right amount of balance between the demand and supply.

Steps in. Aggregate capacity planning;

Aggregate planning consists of the following steps;

(i) Determine the demand for each product for each time period (ie - weeks or months or quaters) over the intermediate time period (3 month to one year).

(ii) Determine the aggregate demand by summing up the demand for each products.

(iii) Transform the aggregate ~~demand by summing up the~~ demand for each time period into workers, materials, machines required to satisfy aggregate demand.

(iv) Make a policy regarding safety stocks, maintainance and suitable menpower.

(v) Determine unit cost for regular time, overtime, sub-contracting (used to oversome short term capacity storages); holding inventories etc.

(vi) Develop alternative resource plans.

(vii) Select a plan with minimum cost.

Adjust capacity to meet the demand

Adjusting capacity when demand is to high;
(increase capacity temporarily)

(i) Increase working time.
(ii) Request overtime work from employees.
(iii) Increase the manpower.
(iv) Hire part-time employees.
(v) Cross-train employees / Train employees for multiple skills.
(It is the process of teaching an employee another set of skills to perform all type of job.)
(vi) Increase facilities (R&D building, refrigeration building, warehouses, Lab, canteen etc) & equipment.
(vii) Rent or share facilities & equipment.
(viii) Proper inventory.

Adjust capacity when demand is too low;
(Adjust use of resources)

(i) Shedule employee training.
(ii) Lay off employees.
(remove from job, because there is not enough work to do.)
(iv) Perform maintenance & renovation
(v) Modify facilities and equipment.
(vi) Shedule downtime during periods of low demand.

Defination of Demand:

Demand means the amount of goods and ~~transfer~~ services that consumers are willing (Ready) and able to buy at a given price during a given time period.

- In any business, the demand of any product or services determines its value and profit or loss of a company.

"When the price of any product increases then its demand will fall and when its price decreases then its demand will increases in the market. Higher the utility higher be the demand and lower the utility, lower would be the demand."

⇒ Each organization has a certain amount of demand for goods and services. Managing this demand is necessary for an organization to be the successful and meet its goals.

Demand managgment :

Demand management is the process of controlling how much material a company needs. This is done by predicting how much material will be used. It is the connection between suppliers and customers.

Demand management is the process of planning, analysis and controlling the movement of goods and services between suppliers (vendor) & consumer. It helps to analyze customer demand & adjust supply chain operations to meet the demand. It includes forecasting future demand, setting targets for meeting that demand & ensuring that the necessary suppliers are available when customer want them.

Objective of Demand management:

(i) Improve customer services.

(ii) Forecasting with greater accuracy.

(iii) Reduce cost.

(iv) Improve existing products and excel at new product introduction

(v) More efficient planning.

UNIT-4 Assembling Line Balancing

Assembling Line Balancing:

An assembling line is an production line, where material moves continuosly through a series of workstations where assembly workpiece is performed. It is a transformation process where the raw material converted into finished product.

- Henry Ford developed the first mass production assembly line.
- In assembling line, workstation are arranged in such a way that the output of one is an input to the next. i.e. series connection.
- Assembly line balancing is used in mass production process by deviding tasks (work-load) into workstation and allocating equal processing time to each one without any delay.
- The basic aim of Assembling line Balancing is to maintain a constant production rate at each workstation.

Application of Assembly line Balancing;

- Manufacting of automobile.
- Assembling air craft.
- In food processing unit like biscuit factory.
- In manufacting unit.

Advantages of assembling line balancing.

- Reduce work handling.
- Uniform production rate.
- Better use of machine and manpower.
- Reduction in work process inventory.
- Less Wastage.

- Less processing time.
- Reducing Ideal time.

Important terminologies of Assembling Line Balancing;

(i) Work-Station: A physical area where a worker work with tools/one or more machine to perform a particular work or task in assembly line.

(ii) Precedence Diagram: A precedence diagram is used to represent the assembly line, it shows the flow of the production activities. We prepare a precedence diagram with the help of nodes and arrows.

(iii) Task Precedence: The sequence in which tasks are performed.

(iv) Cycle Time: It is basically the rate at which the overall production is taking place. The time between the completion of two successive products, assumed constant for all products for a given production line speed.

$$\boxed{\text{Cycle Time} = \frac{\text{Productive Time}}{\text{Demand Per Period}}}$$

(v) Idle Time: It is the time for which a machine does not have a job to process.

Example; Suppose a car is manufacting in assembling line

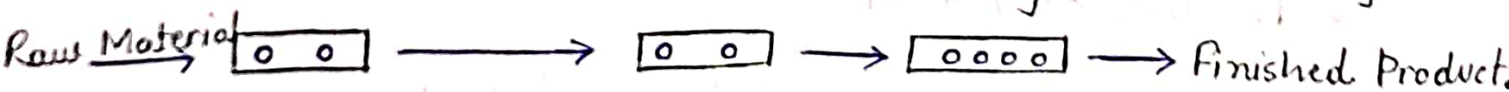

Task time (T_i); time taken by each task in workstation is called task time.

Work Station time (T_{si}); total time taken by each task in workstation. $T_{si} = \Sigma T_i$.

Cycle time ; for any assembling line, cycle time is defined as maximum work station time. $T_c \geq T_{max\,s}$.

Total Work Content / Total Job Flow Time ; Sum of total work station time. $T_{wc} = \sum T_{si}$.

Total available time at workstation; no. of workstation x cycle time. $n \times T_c$.

Balance Delay ; Idle time / total time. $= \frac{nT_c - T_{wc}}{nT_c} \times 100\%$

Line efficiency ; Total work content / available time at workst

Minimum number of workstation, $n = \frac{\text{total work content}}{\text{Cycle Time}}$.

Qn. In an assembly line for assembling toy, five workers are assigned which take time. 10, 8, 6, 9, 10 minutes respectively The balance delay for line is

(i) 14.8 %. (ii) 14 %. (iii) 16.3 %. (iv) 43 %.

$\because$ $n = 5$, $T_1 = 10$, $T_2 = 8$, $T_3 = 6$, $T_4 = 9$, $T_5 = 10$.

$T_c = T_{max\,s} = T_1$ or $T_5 = 10$ min

$T_{wc} = T_1 + T_2 + T_3 + T_4 + T_5 = 43$ min

$\because$ Balance delay $= \frac{nT_c - T_{wc}}{nT_c} \times 100 = \frac{50-43}{50} \times 100 = 14\%$

Qn. The table details of an assembly line

Work station	A	B	C	D	E	F
Total task time at the work station (in min.)	7	9	7	10	9	6

What is the line efficiency of the assembly

$\because$ $n = 6$

$T_c = T_{max} = 10$ min, $T_{wc} = 7+9+7+10+9+6 = 48$ min

$\because$ line efficiency $= \frac{T_{wc}}{nT_c} = \frac{48}{60} \times 100 = 80\%$

Splitting Tasks;

In assembly Line balancing the tasks (work-load) are distributed or splitted in each workstation or manufacturi unit with a specified time period. It is assumed that the required task can not be split or shifted in another workstation without completed.
(ie. They performed at each single station).

Types of Assembly Line Balancing;

1. U-shaped line layouts: In this type of assembly line all the machine and workstation are arranged around a U-shaped line and the product are flow in U shaped line during production operation are performed. In this type of assembly line operators work ~~operators~~ inside the U-line and one operators can supervises both the entrance and the exit of the line.

Advantages of U-shaped line layout:

1. It take less manufacturing area.
2. More communication among operators, better termwork, low material handling cost, higher productivity, less operators are required.
3. The U-shaped production line provides more options for task assignment.
4. U-shaped production lines gives better visibility of the whole production process.
5. In this type of balancing an operator superises to the right and left of a station.
6. Flexible adjustment of the number and output: the no. of units will be decresedor increased flexibly according to the changes in demand.

Mixed model line balancing :

In this type of model similar process, similar work content and similar materials are performed on the same production line with high productivity and high quality without changing the sequence of operation.

Toyota originally developed the concept of mixed model line balancing. And this is mostly used in automobile assembly line.

A mixed model assembly line is a manual production line capable of producing a variety of different product models simultaneously and continuously. Each work-station specializer in a set of assembly work elements.

Production line capable of making several different parts for a given time are called the mixed model production line. Ex. An automobile assembly line.

Advantages of mixed model line balancing;

1. It has a capacity to fulfilled various demand pattern or steams. OR
   Mixed model assembly line produces various model or products to meet the diversified (variation) demand of the current market.
2. It improve employees/workers skill due to working on multiple projects.
3. Proper uses of resource.
4. In this type of model manufacturers, produces large amounts of products at lower cost.

5. Mixed model assembly is the ability to assemble a faimily of products that share share similar processes, similar work content and similar materials, on the same production line with high productivity, high quality.

Current Thoughts on assembly lines;

The current thought on an assembly line means a proper arrangement of skill worker, advanced machines and remaing resources in a manufacting unit (factory), so that it minimizing the processing time and give maximum output. Each worker deals with only one part of product. The product passes from one worker to another until it is finished.

"Assembly lines are manufacturing systems in which work in progress moves from station to station in a sequential manner. At the work-station, new parts are added or new assemblies take place, resulting in a finished products at the end."

Computerized assembly line balancing.

- Computerized assembly line balancing is defined as the production line which are fully controlled by computer or automatic programme equipment and systems. In this type of assembly line, employees involvement is very limited.
- In this type of balancing computer programs have been developed according to the requirement of product needed, like making of food items, car manufacting etc.
- There are many software packages are used in this line like - COMSOAL (computer method of sequencing operation for assembly line), CALB (Computer-aided line balancing) ALPACA (Assembly line planning and control activity).

UNIT-5 Material Management

Material Management :

In any manufacturing operation/organisations, the important inputs are Men, Machines and Material. Material is an important input and directly affects the profit of any manufacturing concern.

Material management is the process of planning, organising and controlling all the activities involving in the complete cycle of materials flow in a company, like purchasing, production and inventory control, material handling, packaging transportation and distributing.

Aim of material management is get...

1. The right material
2. At the right time
3. In the right quantity
4. At the right price
5. From the right source.

Objective of Material Management :

Material management has the following objectives;

1. Purchasing the best quality of material at the lowest price.
2. Receiving & controlling material safely & in good condition.
3. In material management it is ensure that rigit amount of materials are available for production.
4. Selection of best suppliers so that it supply material at reasonable rate (i.e. make a good relation with suppliers)
5. To cut down the costs, through simplification, standardization, value analysis etc. (i.e. reduce overall cost of production).

6. Reduce wastage & defects.
7. Keep all the record of purchasing, quantity of material at reasonable and future demand.

Importance of material management:

1. Proper material management increase productivity and efficiency of an organization due to timely availabity of raw material.
2. Effective material management ensure less wastage of material. (Keep inventory accurate)
3. It helps to acquire right quality, right quantity with right price from right source.
4. Transportation and handling of material.
5. Avoid damage or loss of material.
6. Effective material management minimize storage costs. (Applying JIT just-in-time or no over stock)
7. Saving of labour time.
8. Smooth flow of production.
9. Disposal of scrap, surplus (extra) & outdated material.

Stores:

A store is a place where various items such as raw materials, tools, semi-finished products, spare parts, finished goods, scrap etc, are kept (place) is known as store or warehouse.

Storekeeping:

Storekeeping may be defined as a function of receiving storing & issuing of raw materials, tools, spares, consumables items etc to the respective department.

Objectives of storekeeping:

1. To make a balanced flow of raw materials, component tools, equipments & any other items necessary to meet the production requirements.
2. To maintain a sufficient stocks of materials, if transportation delay & irregularities in purchasing take place.
3. Make a proper records of all goods present in store.
4. To prevent from theft, damage, wastage of stored items.

- Storing or Storekeeping is a service to the production department.

Types of stores

1. Closed Stores: All items are stored in a closed and controlled area. In this store only permitted person will enter, small & costly items are mostly stores in this store.
2. Open stores: Materials are stored in open area and close to the point of use. Those material whose consumption is very high are store in this store, like ore, coal, sand bricks etc.

3. Centralised stores: In small industry centralised store is present. In this system the store room is located very near to the place of use. If there are number of manufacturing departments, the store room is near to all the department, so minimizing material handling cost. In this store better supervision and control is possible.

4. Decentralised store: Decentralised stores are preffered in large factory, having diffierent departments using different kinds of materials & each department has its own store.

Policies : The rules and regulations of the business organization are foramed in the form of policies. The policies are made by the top level of management and fully acceptable by all people. It is decision making process. They must be based on past experiences, facts and knowledge. Policies are an integral part of the big operation which helps in its smooth functioning

Procedure : Procedure means step-by-step sequence, for the performance of activity within the organization. A shedule of activities which needs to be performed, one after the other, in a fixed period, having a proper beginning and end is known as the procedure. It is an action making process.

Example of procedure

Suppose an order of materials has to be placed then the following procedure needs to be followed.

Step 1: Stores department will send a purchase request to purchase department.

Step 2: Purchase department will analyse and compare the bill of materials.

Step 3: Sourcing and advertising of materials.

Step 4: Receiving quotations from various suppliers.

Step 5: Evalution of quotations concerning price, quality, quantity etc.

Step 6: Placement of order.

Step 7: Receiving material from suppliers.

Step 8: Checking of materials.

Step 9: Preparation of material received notes.

Step 10: Making payment to suppliers.

Vendor: A vendor is a party in the supply chain that makes goods and services available to companies or consumers. A vendor also known as supplier.

A vendor purchase products and services and then sells them to another company or consumer. Vendor means a company or person who sells and supplies its product.

Vendor development: Vendor depelopment can be defined as the activity that a buying company wants to improve a suppliers performance, capacity so that it fullfil the supply needs.

for example ;— Suppose a car manufacturing company need many parts and every parts is not possible to manufactured in the industry, so they help form vendors company who are spacialized in the part. So the car manufacturing in the industry, so they help from vendors company who are spacialized in that part. So the car manufacturing company makes all the activity to improve the suppliers performance.

Vendor Selection :

It is the process of selecting the best suppliers.

1. On the basis of type of business or manufacturing units.
2. Making a list of vendors/suppliers.
3. Select the best potential vendors. (on past performances record)
4. Select the vendor that provides a better quality of the material.
5. Select those suppliers which selling a good quality product at a resonable prize.
6. On the basis of mode of payment. (like payment through debit card, cheque, internet banking, UPI).
7. On the basis of service providing.
8. Make a contact (ligally binding document)

Vendor Analysis : A vendor analysis means a deep knowledge of your suppliers and vendors. It helps us to understand how we choosen vendors operate, how we can benefit your business, and what are our potential. This process helps us to identify the best vendors for our company. It also helps to understand our vendor's capabilities and how well they meet our needs.

Vendor Rating :

Vendor rating is the measurement of suppliers/vendor performance. The performance is checked by-

1. Quality of product
2. Delivery performance (delivery time)
3. Price applied
4. Service providing.

Advantage of vendor rating :

1. It helps to know the vendor is suitable for deal or not.
2. It assists the buyer in identifing areas of weakness in the vendor's performace and allow the buyer to take corrective steps.
3. Providing feedback from all areas in one package.
4. It help us for continuous improvement of vendor performance.
5. It helps the buyers to strike the rigid kind of communication required.

Function of material management

1. Right Material
2. Right Time
3. Right Amount
4. Right Price
5. Right Source

function;

1. Material planning and control
2. Purchasing
3. Store management
4. Inventory control management

Purchasing:

Objective;

- To able the material, suppliers and equipment at minimum possible cost.
- To ensure the continuous flow of production.
- To develop an alternative source of supply.
- To increase asset turnover.
- To develop purchase policy and procedure.

Purchase Procedure

1. Determining purchase budget;
2. Receipt of purchase requisition
3. Determining source of supply
4. Placing order
5. Follow up of placing order
6. Receipt and inspection of material
7. Checking invoice.

UNIT-2

Production Forecasting

- Quantitative Forecasting

1. Naive Approach;

- If the actual sales for a product in Jan 2022 is 100 unit, then demand for Feb 2022 is also 100 units.

$$\boxed{F_{Feb} = D_{Jan} = 100 \text{ unit}}$$

2. Past average method;

$$\boxed{F_x = \frac{\text{Sum of demand for all past period}}{\text{no. of period}}}$$

3. Moving Past average method;

$$\boxed{F_x = \frac{\text{Sum of demand in past } n \text{ months}}{\text{choosen no. of period}}}$$

4. Exponential Smoothing Method;

$$\boxed{F_x = F_{x-1} + \alpha(D_{x-1} - F_{x-1})} \quad \boxed{0 \le \alpha \le 1}$$

If $\alpha = 0$,
then, $\boxed{F_x = F_{x-1}}$

If $\alpha = 1$,
then $\boxed{F_x = D_{x-1}}$

5. Weighted moving average method;

$$\boxed{F_x = \frac{\omega_1 d_{x-1} + \omega_2 d_{x-2} + \omega_3 d_{x-3}}{\omega_1 + \omega_2 + \omega_3}}$$

Where, ω_1, ω_2 & ω_3 are the weightage of last three months.

- Sequencing

UNIT-3

Break Even Analysis

$$\boxed{\text{Total Cost} = \text{Variable Cost} + \text{Fixed Cost}} \quad (T_c = V_c + F_c)$$

$$\boxed{\text{Total Selling Cost} = \text{Total Cost} + \text{Profit}} \quad (T_{sc} = T_c + P)$$

$$\boxed{x_{BEP} = \frac{F_c}{(S_c - V_c)/\text{unit}}} \qquad \boxed{x_{\text{any amount}} = \frac{F_c + P}{(S_c - V_c)/\text{unit}}}$$

$$\text{margin} = \text{Output Production} - \text{Production at BEP}$$

$$\text{Contribution} = \text{Selling Cost} - \text{Variable Cost}$$

$$\text{Profit-Volume Ratio} = \frac{\text{Contribution}}{\text{Sales}} \times 100$$

$$\text{Margin of Safety} = \frac{\text{Profit}}{\text{P-V ratio}} = \frac{\text{Profit} \times \text{Sales}}{\text{Sales} - \text{Variable Cost}}$$

UNIT - 4

Assembly Line Balancing

$$\text{Cycle Time} = \frac{\text{Productive Time}}{\text{Demand per Period}}$$

$$\text{Idle Time} = T_{\text{takingtime}} - T_{\text{completed Job}} = T_{\text{m/c at rest}}$$

$$\text{Idle Time} = \text{Work Station Time} - \text{Task Time}$$

$$\text{Total Work content} = \Sigma \text{ Work station time}$$

$$\text{Balance Time Delay} = \frac{\text{Idle time}}{\text{Total time}} = \frac{nT_c - T_{wc}}{nT_c} \times 100$$

$$\text{no. of WS} = \frac{\text{Total Work Content}}{\text{Cycle Time}} = \frac{t_{wc}}{T_c}$$

Where, n = no. of workstation

T_c = Cycle time

T_{wc} = Σ Work station time

$$\text{Line efficiency} = 1 - \text{Balance delay}$$

OR,

$$\frac{\text{Total Work Content}}{\text{Available Time at Workstation}}$$